RoHS

Wellshow Technology

www.wellshow.com

REV	DESCRIPTION	DATE
2.00	CHG STIRP DIM 1.5/0.9/2.0 W. 1.5/0.6/2.0, CHG DIM 0.8 W. 0.5	2014/06/09
2.10	ADD DIM ϕ0.95	2024/02/06
2.11	CHG VSWR 1.5 MAX W. 1.35 MAX	2025/04/25

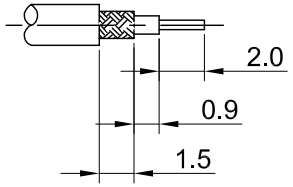

RECOMMENDED
STRIP LENGTHS

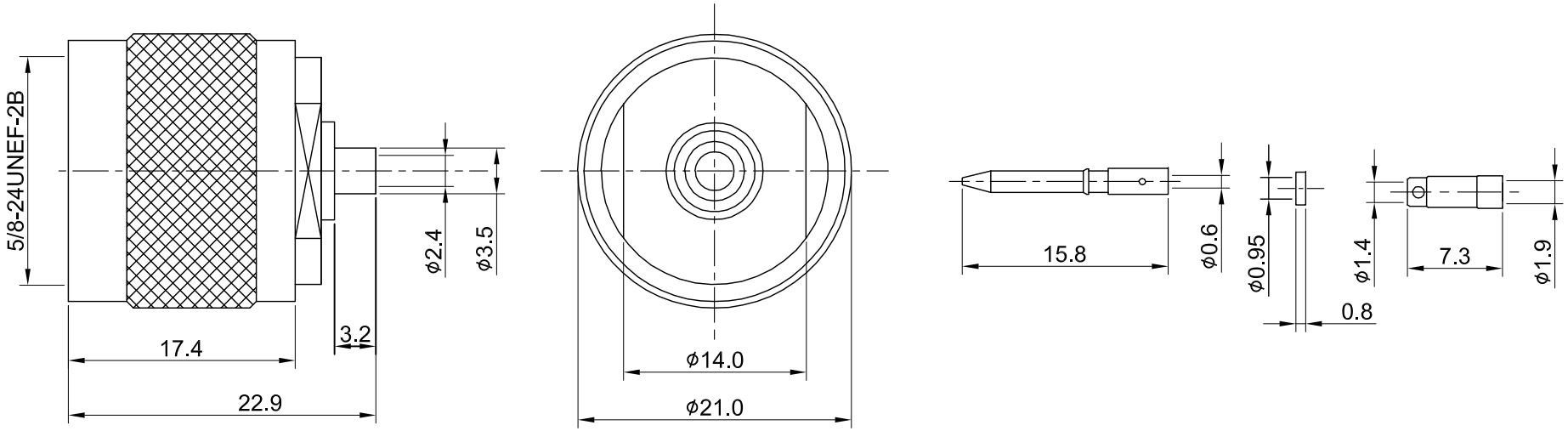

MECHANICAL DATA
TEMPERATURE RANGE : -65°C ~ + 165°C

ELECTRICAL DATA
FREQUENCY RANGE: DC~6GHz
IMPEDANCE : 50Ω
VSWR : 1.5 MAX.
WORKING VOLTAGE : AC 1000V
WITHSTANDING VOLTAGE : AC 2500V
INSULATION RESISTANCE : 5000 MΩ MIN

NO	DESCRIPTION	MATERIAL	FINISH	Q'TY
07	FERRULE	BRASS	NICKEL	1
06	C-RING	STAINLESS STEEL	NONE	1
05	SHELL	BRASS	NICKEL	1
04	GASKET	SILICONE RUBBER	NONE	1
03	CENTER PIN	BRASS	GOLD	1
02	INSULATOR	TEFLON	NONE	1
01	BODY	BRASS	NICKEL	1

TITLE
N(M)st. crimp type for RG178

DWG NO.
C27CA31178001C

Wellshow

CUST.
P/N: N/A
DWG NO: N/A

SHEET 1 of 1

Unit: mm

GENERAL TOLERANCES
.X ±0.2
.XX ±0.2
.XXX ±0.2
ANGLES N/A

DRAWN BY: Oscar 2025/04/25
CHK'D BY: Chili 2025/04/25

DA2504230006

REV. 2.11